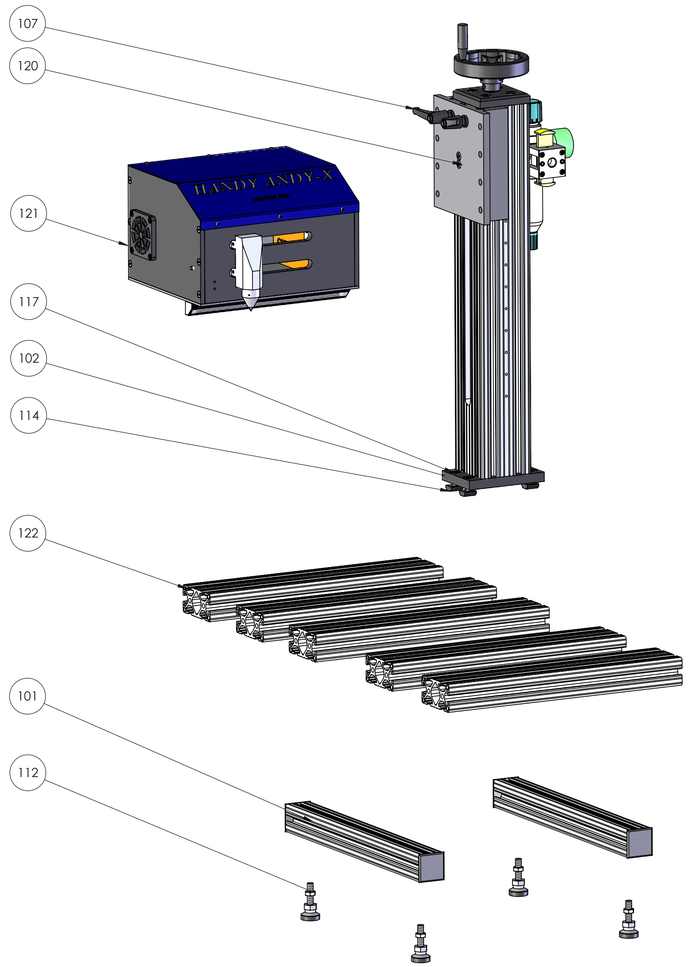

ITEM NO.	QTY.	PART NUMBER	DESCRIPTION	Vendor
100	1	IMSTAND-A001-002	RISER	CMT
101	2	1515 X 13.25	CROSS SUPPORT	8020
102	1	IMSTAND-A001-004	BOTTOM CAP	CMT
103	1	IMSTAND-A001-005	TOP CAP	CMT
104	1	IMSTAND-A001-006	SHAFT NUT	CMT
105	1	IM 6824-GLIDE	BEARING GLIDE	8020
106	2	.25 TEKO WASHER	WASHER	STD
107	2	JCL-246	LOCKL HANDLE	CMT
108	1	WHW-120	HAND WHEEL	CMT
109	2	PRB_31	BEARING	CMT
110	1	MCMASTER 99030A805	DRIVE SCREW	ALTER
111	4	2030 CAP	END CAP	8020
112	4	SL-100B	LEVELER FOOT	REID
113	2	40-1964_T-NUT	M-6 T-NUT	8020
114	4	40-1984_T-NUT	T-NUT	8020
115	1	P14B-02GLV	AIR REGULATOR	NUMATICS
116	1	IM ADAPTER PLATE	ADAPTOR PLATE	CMT
117	16	B18.3.1M - 8 x 1.25 x 16 Hex SHCS -- 16NHX	SOC. HD. CAP SCREW	STD
118	2	B18.3.1M - 3 x 0.5 x 40 Hex SHCS -- 18NHX	SOC. HD. CAP SCREW	STD
119	1	B18.3.6M - M6 x 1.0 x 5 Hex Socket Type I Cup Pt. SS --N	SOC SET SCREW	STD
120	2	B18.3.4M - 6 x 1.0 x 12 SBHCS --N	SOC. BUTTON HD. SCREW	STD
121	1	CMTHA-A001	HANDY ANDY X	CMT
122	5	1530-Lite X 12	BASE PLATE	STD

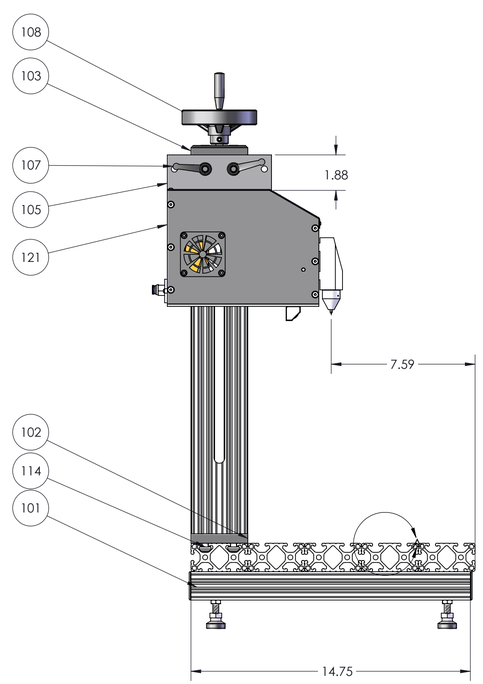

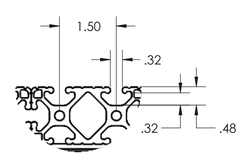

DETAIL A
SCALE 1 : 2

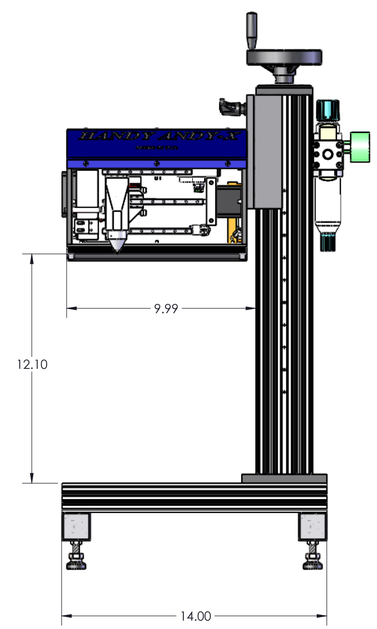

UNLESS OTHERWISE SPECIFIED:

DIMENSIONS ARE IN INCHES
TOLERANCES:
FRACTIONAL ±
ANGULAR: MACH ± BEND ±
TWO PLACE DECIMAL ±
THREE PLACE DECIMAL ±

INTERPRET GEOMETRIC TOLERANCING PER:

MATERIAL

FINISH

	NAME	DATE
DRAWN	AJH	05/2013
CHECKED		
ENG APPR.		
MFG APPR.		
Q.A.		

PROPRIETARY AND CONFIDENTIAL
THE INFORMATION CONTAINED IN THIS DRAWING IS THE SOLE PROPERTY OF COLUMBIA MARKING TOOLS. ANY REPRODUCTION IN PART OR AS A WHOLE WITHOUT THE WRITTEN PERMISSION OF COLUMBIA MARKING TOOLS IS PROHIBITED.

CMT COLUMBIA MARKING TOOLS
27430 LUCKINO DRIVE CHESTERFIELD, MI 48070

TITLE:

HANDY ANDY STAND

SIZE D | DWG. NO. HA-STANDm01 | REV

SCALE: 1:5 WEIGHT: SHEET 1 OF 2

REV D HA-STANDm01